Key: 1178

Town of CHATHAM - Fiscal Year 2024

9/7/2023 9:38 am SEQ #: 1.291

LEGAL

CURRENT OWNER	PARCEL ID	LOCATION
ROCA RUBEN A & MARY E **784 TARAWITT DR** **LONGBOAT KEY, FL 34228-1822**	**12F-22-G11**	**99 PERCH POND RD**

TRANSFER HISTORY	DOS	T	SALE PRICE	BK-PG (Cert)
ROCA RUBEN A & MARY E	06/27/1977	QS	48,250	(70976)

CLASS	CLASS%	DESCRIPTION	BN ID	BN	CARD
1010	**100**	**SINGLE FAMILY**		**1**	**1 of 1**

PMT NO	PMT DT	TY	DESC	AMOUNT	INSP	BY	1st	%
	04/05/2007	50	Meas & List			RRC	100	100

LAND

CD	T	AC/SF/UN	Nbhd		Infl1		Infl2		ADJ BASE	SAF	Infl3		Lpi		VC	CREDIT AMT	ADJ VALUE
100	S	40,000	MC	1.00	100	1.00	100	1.00	439,800	1.00	100	1.00	PF1	1.20			403,860
300	A	0.481	MC	1.00	100	1.00	100	1.00	23,040	1.00	100	1.00	PF1	1.20			11,080

TOTAL	1.399 Acres	ZONING	R20	FRNT	0
Nbhd	MID CHATHAM	NOTE	Pond Frontage		
Infl1	100				
Infl2	100				

ASSESSED	CURRENT	PREVIOUS
LAND	414,900	302,500
BUILDING	448,100	413,500
DETACHED	0	0
OTHER	0	0
TOTAL	**863,000**	**716,000**

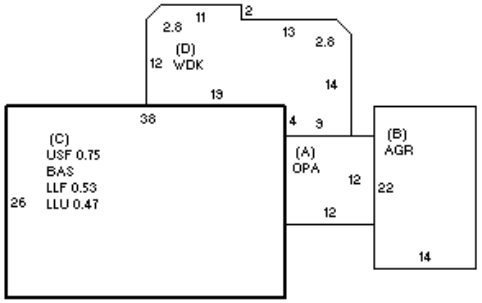

DETACHED

TY	QUAL	COND	DIM/NOTE	YB	UNITS	ADJ PRICE	RCNLD

PHOTO 12/09/2021

BLDG COMMENTS

BUILDING

BUILDING	CD	ADJ	DESC
MODEL	1		RESIDENTIAL
STYLE	4	1.00	CAPE [100%]
QUALITY	A	1.00	AVERAGE [100%]
FRAME	1	1.00	WOOD FRAME [100%]

MEASURE	12/9/2021	NF
LIST	12/9/2021	EST
REVIEW	1/19/2022	EMZ

YEAR BLT	1977	SIZE ADJ	1.000
NET AREA	1,729	DETAIL ADJ	1.050
$NLA(RCN)	$365	OVERALL	1.000

CAPACITY	UNITS	ADJ
STORIES	1.75	1.00
ROOMS	7	1.00
BEDROOMS	4	1.00
FULL BATHS	2	1.00
1/2 BATHS	0	1.00
FIXTURES	6	$5,040
UNITS	1	1.00

ELEMENT	CD	DESCRIPTION	ADJ
FOUNDATION	4	FLR & WALL	1.00
EXT. COVER	1	WOOD SHINGLE	1.00
ROOF SHAPE	1	GABLE	1.00
ROOF COVER	1	ASPH/CMP SHIN	1.00
FLOOR COVER	34	CARPET/ASPH TL	1.00
INT. FINISH	2	DRYWALL	1.00
HEATING/COOL	11	HT-WT/COOL AIR	1.05
FUEL SOURCE	1	OIL	1.00

S	BAT	T	DESCRIPTION	UNITS	YB	ADJ PRICE	RCN
A	OPA	N	OPEN PORCH	144		76.10	10,958
B	AGR	N	ATTACHED GARAGE	308		83.69	25,778
C	LLU	N	LOWER LEVEL UN	464		138.02	64,039
C	LLF	N	LOWER LEVEL FIN	524		180.26	94,458
C	BAS	L	BAS AREA	988	1977	244.95	242,010
C	USF	L	UP-STRY FIN	741	1977	207.85	154,015
D	WDK	N	WOOD DECK	394		58.40	23,010
	F21	O	FPL 2S 1OP	1		10,376.00	10,376
	ODS	O	OUT DOOR SHWR-A	1		1,477.00	1,477

TOTAL RCN	631,161

CONDITION ELEM	CD
EXTERIOR	A
INTERIOR	A
KITCHEN	A
BATHS	A
HEAT	A
ELECT	A

EFF.YR/AGE	1975 / 47		
COND	29	29 %	
FUNC	0		
ECON	0		
DEPR	29	% GD	71
RCNLD			$448,100