Key: 13632

Town of CHATHAM - Fiscal Year 2024

9/7/2023 9:38 am SEQ #: 9,029

LEGAL

CURRENT OWNER	PARCEL ID	LOCATION
GLAUNINGER MATHEW & JULIE **1 CHARLES ST SOUTH UNIT 4H** **BOSTON, MA 02116**	**13F-29-H18**	**20 HYDRANGEA LN**

TRANSFER HISTORY	DOS	T	SALE PRICE	BK-PG (Cert)
GLAUNINGER MATHEW & JULIE	03/26/2021	A	10	(215922)
TWENTY HYDRANGEA LANE LLC	04/17/2018	P	450,000	(215922)
EASTWARD HOMES BUSINESS T	01/29/2016			(208656)

CLASS	CLASS%	DESCRIPTION	BN ID	BN	CARD
1010	**100**	**SINGLE FAMILY**		**1**	**1 of 1**

PMT NO	PMT DT	TY	DESC	AMOUNT	INSP	BY	1st	%
SS20-06	09/27/2018	99	n/a				100	100
18-103	02/02/2018	3	Renovations		07/06/2018	NF	100	100
18-060	01/22/2018	6	Pools etc	75,000	01/29/2019	TCK	100	100
17-809	11/22/2017	1	New Construc	705,000	01/29/2019	TCK	100	100
SS18-11	12/31/2016	20	Splits/Land				100	100

LAND

CD	T	AC/SF/UN	Nbhd	Infl1	Infl2	ADJ BASE	SAF	Infl3	Lpi	VC	CREDIT AMT	ADJ VALUE
100	S	18,970	MC 1.00	100 1.00	100 1.00	916,250	1.86	100 1.00	R08 2.50			740,820

TOTAL	18,970 SF	ZONING		FRNT	0
Nbhd	MID CHATHAM	NOTE			
Infl1	100				
Infl2	100				

ASSESSED	CURRENT	PREVIOUS
LAND	740,800	456,800
BUILDING	1,621,000	1,491,500
DETACHED	49,300	47,000
OTHER	0	0
TOTAL	**2,411,100**	**1,995,300**

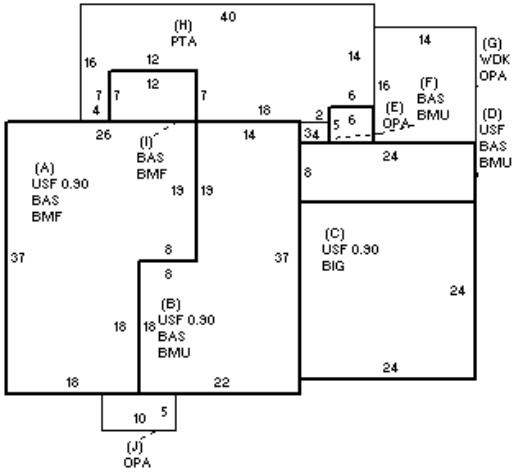

DETACHED

TY	QUAL	COND	DIM/NOTE	YB	UNITS	ADJ PRICE	RCNLD
IPG	A 1.00	10 0.90	36X18	2018	648	39.23	22,900
SHF	A 1.00	10 0.90	8X10	2018	80	15.24	1,100
PTD	A 1.00	10 0.90	14X36+40X22	2018	1,384	11.30	14,100
SNA	A 1.00	10 0.90	10X10	2018	100	124.40	11,200

PHOTO 01/29/2019

BLDG COMMENTS

BUILDING

BUILDING	CD	ADJ	DESC
MODEL	1		RESIDENTIAL
STYLE	4	1.00	CAPE [100%]
QUALITY	G	1.55	GOOD [100%]
FRAME	1	1.00	WOOD FRAME [100%]

MEASURE	7/6/2018	NF
LIST	3/14/2019	TCK
REVIEW	6/4/2019	TD

YEAR BLT	2017	SIZE ADJ	1.000
NET AREA	3,828	DETAIL ADJ	1.030
$NLA(RCN)	$446	OVERALL	1.000

CAPACITY	UNITS	ADJ
STORIES	1.9	1.00
ROOMS	8	1.00
BEDROOMS	4	1.00
FULL BATHS	6	1.00
1/2 BATHS	1	1.00
FIXTURES	21	$26,821
UNITS	1	1.00

ELEMENT	CD	DESCRIPTION	ADJ
FOUNDATION	3	FOUND WALL	1.00
EXT. COVER	1	WOOD SHINGLE	1.00
ROOF SHAPE	1	GABLE	1.00
ROOF COVER	1	ASPH/CMP SHIN	1.00
FLOOR COVER	1	HARDWOOD	1.00
INT. FINISH	2	DRYWALL	1.00
HEATING/COOL	9	WARM/COOL AIR	1.03
FUEL SOURCE	2	GAS	1.00

S	BAT	T	DESCRIPTION	UNITS	YB	ADJ PRICE	RCN
+	BMF	N	BSMT FINISH-SEP	902		168.33	151,833
+	BAS	L	BAS AREA	1,786	2017	357.95	639,290
+	USF	L	UP-STRY FIN	2,042	2017	303.73	620,212
+	BMU	N	BSMT UNFINISHED	884		115.54	102,137
C	BIG	N	BUILT-IN GARAGE	576		119.61	68,896
+	OPA	N	OPEN PORCH	286		117.96	33,736
G	WDK	N	WOOD DECK	224		90.52	20,277
H	PTA	N	PATIO/STOOP	544		27.75	15,094
	F21	O	FPL 2S 1OP	1		16,082.80	16,083
	GFP	O	GAS LOG/FP/E FP	1		9,644.10	9,644
	ODS	O	OUT DOOR SHWR-A	1		2,289.40	2,289

TOTAL RCN	1,706,313

CONDITION ELEM	CD
EXTERIOR	A
INTERIOR	A
KITCHEN	A
BATHS	A
HEAT	A
ELECT	A

EFF.YR/AGE	2017 / 5		
COND	5 5 %		
FUNC	0		
ECON	0		
DEPR	5	% GD	95
RCNLD	$1,621,000		