**Key: 2585**

# Town of CHATHAM - Fiscal Year 2024

9/7/2023 9:38 am SEQ #: 2,792

## LEGAL

| CURRENT OWNER | PARCEL ID | LOCATION |
|---|---|---|
| **BURR FAMILY TRUST**<br>**BURR WHTINEY & LESLIE TRSTES**<br>**175 SHANE DR**<br>**CHATHAM, MA 02633** | **14G-39-B21A** | **175 SHANE DR** |

| TRANSFER HISTORY | DOS | T | SALE PRICE | BK-PG (Cert) |
|---|---|---|---|---|
| BURR FAMILY TRUST | 08/21/2015 | A | 1 | 29087-232 |
| BURR WHITNEY H & LESLIE M | 11/21/2001 | QS | 135,000 | 14471-141 |
| RILEY WILLIAM F & PAMELA | 03/10/2000 | F | 75,000 | 12875-260 |

| CLASS | CLASS% | DESCRIPTION | BN ID | BN | CARD |
|---|---|---|---|---|---|
| **1010** | **100** | **SINGLE FAMILY** | | **1** | **1 of 1** |

| PMT NO | PMT DT | TY | DESC | AMOUNT | INSP | BY | 1st | % |
|---|---|---|---|---|---|---|---|---|
| 16-081 | 02/22/2016 | 77 | SOLAR PANELS | 12,000 | 05/19/2017 | NF | 100 | 100 |
| | 02/12/2008 | 50 | Meas & List | | | RRC | 100 | 100 |
| 01-563 | 11/16/2001 | 1 | New Construc | 180,000 | | | 100 | 100 |
| 1999313 | 12/21/1999 | 99 | n/a | | | | 100 | 100 |

## LAND

| CD | T | AC/SF/UN | Nbhd | Infl1 | Infl2 | ADJ BASE | SAF | Infl3 | Lpi | VC | CREDIT AMT | ADJ VALUE |
|---|---|---|---|---|---|---|---|---|---|---|---|---|
| 100 | S | 13,500 | MC 1.00 | 100 1.00 | 100 1.00 | 439,800 | 2.48 | 100 1.00 | R06 1.20 | | | 337,740 |

| TOTAL | 13,500 SF | ZONING | R40 | FRNT | 88 |
|---|---|---|---|---|---|
| Nbhd | MID CHATHAM | NOTE | | | |
| Infl1 | 100 | | | | |
| Infl2 | 100 | | | | |

| ASSESSED | CURRENT | PREVIOUS |
|---|---|---|
| LAND | 337,700 | 281,400 |
| BUILDING | 686,900 | 632,900 |
| DETACHED | 0 | 0 |
| OTHER | 0 | 0 |
| TOTAL | **1,024,600** | **914,300** |

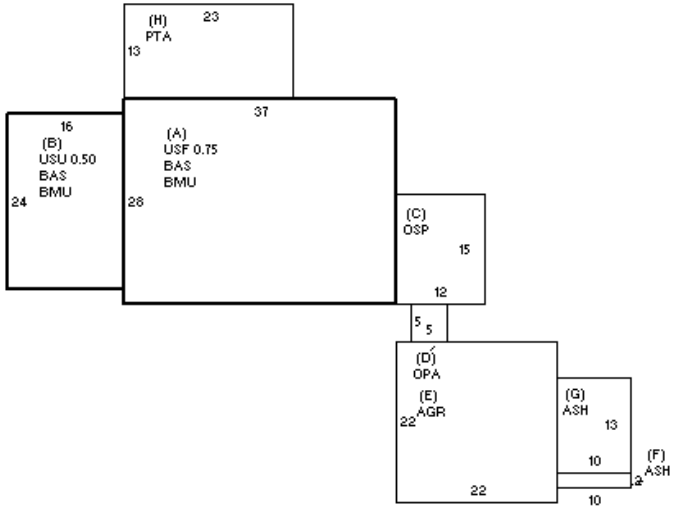


## DETACHED

| TY | QUAL | COND | DIM/NOTE | YB | UNITS | ADJ PRICE | RCNLD |
|---|---|---|---|---|---|---|---|

PHOTO 10/21/2021

## BUILDING

| BUILDING | CD | ADJ | DESC |
|---|---|---|---|
| MODEL | 1 | | RESIDENTIAL |
| STYLE | 4 | 1.00 | CAPE [100%] |
| QUALITY | + | 1.20 | PLUS AVE [100%] |
| FRAME | 1 | 1.00 | WOOD FRAME [100%] |

| MEASURE | 10/21/2021 | NF |
|---|---|---|
| LIST | 10/21/2021 | EST |
| REVIEW | 12/2/2021 | EMZ |

BLDG COMMENTS

9 SOLAR PANELS EST

| YEAR BLT | 2002 | SIZE ADJ | 1.000 |
|---|---|---|---|
| NET AREA | 2,197 | DETAIL ADJ | 1.030 |
| $NLA(RCN) | $391 | OVERALL | 1.000 |

| CAPACITY | UNITS | ADJ |
|---|---|---|
| STORIES | 1.75 | 1.00 |
| ROOMS | 6 | 1.00 |
| BEDROOMS | 3 | 1.00 |
| FULL BATHS | 2 | 1.00 |
| 1/2 BATHS | 1 | 1.00 |
| FIXTURES | 8 | $7,910 |
| UNITS | 1 | 1.00 |

| ELEMENT | CD | DESCRIPTION | ADJ |
|---|---|---|---|
| FOUNDATION | 4 | FLR & WALL | 1.00 |
| EXT. COVER | 1 | WOOD SHINGLE | 1.00 |
| ROOF SHAPE | 1 | GABLE | 1.00 |
| ROOF COVER | 1 | ASPH/CMP SHIN | 1.00 |
| FLOOR COVER | 16 | HARDWD/OTHER | 1.00 |
| INT. FINISH | 2 | DRYWALL | 1.00 |
| HEATING/COOL | 9 | WARM/COOL AIR | 1.03 |
| FUEL SOURCE | 2 | GAS | 1.00 |

| S | BAT | T | DESCRIPTION | UNITS | YB | ADJ PRICE | RCN |
|---|---|---|---|---|---|---|---|
| + | BMU | N | BSMT UNFINISHED | 1,420 | | 80.93 | 114,922 |
| + | BAS | L | BAS AREA | 1,420 | 2002 | 293.64 | 416,968 |
| A | USF | L | UP-STRY FIN | 777 | 2002 | 249.16 | 193,600 |
| B | USU | N | UPPER STORY UNF | 192 | | 149.61 | 28,726 |
| C | OSP | N | OPEN SCR PORCH | 180 | | 94.56 | 17,021 |
| D | OPA | N | OPEN PORCH | 25 | | 91.34 | 2,284 |
| E | AGR | N | ATTACHED GARAGE | 484 | | 94.27 | 45,629 |
| + | ASH | N | ATT SHED | 150 | | 72.72 | 10,908 |
| H | PTA | N | PATIO/STOOP | 299 | | 21.48 | 6,422 |
| | F21 | O | FPL 2S 1OP | 1 | | 12,451.20 | 12,451 |
| | ODS | O | OUT DOOR SHWR-A | 1 | | 1,772.40 | 1,772 |

| TOTAL RCN | 858,612 |
|---|---|

| CONDITION ELEM | CD |
|---|---|
| EXTERIOR | A |
| INTERIOR | A |
| KITCHEN | A |
| BATHS | A |
| HEAT | A |
| ELECT | A |

| EFF.YR/AGE | 2002 / 20 | | |
|---|---|---|---|
| COND | 20 | 20 % | |
| FUNC | 0 | | |
| ECON | 0 | | |
| DEPR | 20 | % GD | 80 |
| RCNLD | | | $686,900 |