Key: 3666

Town of CHATHAM - Fiscal Year 2024

9/7/2023 9:38 am SEQ #: 3,989

LEGAL

CURRENT OWNER	PARCEL ID	LOCATION
DAWNING DAY LLC **137 HERBERT RD** **ARLINGTON, MA 02474-8524**	**16B-59-65**	**102 WATER ST**

TRANSFER HISTORY	DOS	T	SALE PRICE	BK-PG (Cert)
DAWNING DAY LLC	05/16/2011	A	1	25450-339
DAWNING DAY LIMITED PARTN	12/30/1988	A	1	()

CLASS	CLASS%	DESCRIPTION	BN ID	BN	CARD
1010	**100**	**SINGLE FAMILY**		**1**	**1 of 1**

PMT NO	PMT DT	TY	DESC	AMOUNT	INSP	BY	1st	%
20-263	10/27/2020	10	Reroof	4,345	03/25/2021	NF	100	100
21-281	04/30/2020	10	Reroof	14,000	03/25/2021	NF	100	100
11-371	09/30/2011	1	New Construc	60,000	07/11/2013	SF	100	100
	05/15/2008	50	Meas & List			RRC	100	100
97-460	12/01/1997	3	Renovations	60,000			100	100

LAND

CD	T	AC/SF/UN	Nbhd	Infl1	Infl2	ADJ BASE	SAF	Infl3	Lpi	VC	CREDIT AMT	ADJ VALUE
100	S	10,871	CH 1.00	100 1.00	100 1.00	2,382,250	2.98	100 1.00	WV8 6.50			1,772,810

TOTAL	10,871 SF	ZONING	R20	FRNT	0
Nbhd	CHATHAM	NOTE			
Infl1	100				
Infl2	100				

ASSESSED	CURRENT	PREVIOUS
LAND	1,772,800	1,477,300
BUILDING	825,000	726,500
DETACHED	10,200	9,700
OTHER	0	0
TOTAL	**2,608,000**	**2,213,500**

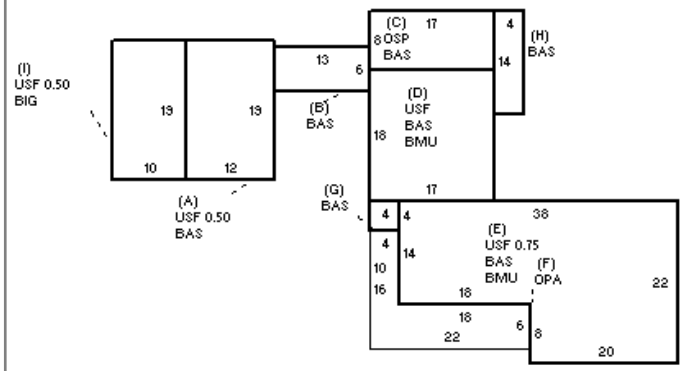

DETACHED

TY	QUAL	COND	DIM/NOTE	YB	UNITS	ADJ PRICE	RCNLD
DGF	A 1.00	10 0.90	12X18	2011	216	52.38	10,200

PHOTO 03/25/2021

BLDG COMMENTS

BUILDING

BUILDING	CD	ADJ	DESC
MODEL	1		RESIDENTIAL
STYLE	18	1.30	RENO'D ANTIQUE [100%]
QUALITY	+	1.20	PLUS AVE [100%]
FRAME	1	1.00	WOOD FRAME [100%]

MEASURE	2/21/2017	MR
LIST	2/21/2017	EST
REVIEW	5/25/2021	EMZ

YEAR BLT	1840	SIZE ADJ	1.000
NET AREA	2,546	DETAIL ADJ	1.300
$NLA(RCN)	$410	OVERALL	1.000

CAPACITY	UNITS	ADJ
STORIES	2	1.00
ROOMS	12	1.00
BEDROOMS	7	1.00
FULL BATHS	4	1.00
1/2 BATHS	0	1.00
FIXTURES	14	$17,472
UNITS	1	1.00

ELEMENT	CD	DESCRIPTION	ADJ
FOUNDATION	4	FLR & WALL	1.00
EXT. COVER	2	CLAPBOARD	1.00
ROOF SHAPE	1	GABLE	1.00
ROOF COVER	1	ASPH/CMP SHIN	1.00
FLOOR COVER	32	CARPET/SOFTWD	1.00
INT. FINISH	1	PLASTER	1.00
HEATING/COOL	1	FORCED AIR	1.00
FUEL SOURCE	2	GAS	1.00

S	BAT	T	DESCRIPTION	UNITS	YB	ADJ PRICE	RCN
+	BAS	L	BAS AREA	1,434	1840	367.47	526,945
+	USF	L	UP-STRY FIN	209	2011	311.80	65,167
B	BAS	L	BAS AREA	78	2011	367.46	28,662
C	OSP	N	OPEN SCR PORCH	136		94.56	12,860
+	BMU	N	BSMT UNFINISHED	998		86.86	86,687
+	USF	L	UP-STRY FIN	825	1840	311.81	257,240
F	OPA	N	OPEN PORCH	172		91.32	15,707
I	BIG	N	BUILT-IN GARAGE	190		110.97	21,085
	F21	O	FPL 2S 1OP	1		12,451.20	12,451

TOTAL RCN	1,044,277

CONDITION ELEM	CD
EXTERIOR	G
INTERIOR	G
KITCHEN	G
BATHS	G
HEAT	U
ELECT	A

EFF.YR/AGE	2000 / 22		
COND	21	21 %	
FUNC	0		
ECON	0		
DEPR	21	% GD	79
RCNLD			$825,000