Key: 5032

Town of CHATHAM - Fiscal Year 2024

9/7/2023 9:38 am SEQ #: 5,473

LEGAL

CURRENT OWNER	PARCEL ID	LOCATION
DAVID T & NANCY G BEAUCHAMP TRUSTS BEAUCHAMP DAVID T & NANCY G TRSTES 203 TAYLORS POND RD S CHATHAM, MA 02659	4C-56-T6	203 TAYLORS POND RD

TRANSFER HISTORY	DOS	T	SALE PRICE	BK-PG (Cert)
DAVID T & NANCY G BEAUCHA	06/25/2004	A	1	18759-177
BEAUCHAMP, DAVID & NANCY	07/02/1999	A	1	12384-250
BEAUCHAMP	09/05/1980	QS	155,000	3148-258

CLASS	CLASS%	DESCRIPTION	BN ID	BN	CARD
1010	100	SINGLE FAMILY		1	1 of 1

PMT NO	PMT DT	TY	DESC	AMOUNT	INSP	BY	1st	%
	03/09/2009	50	Meas & List			RRC	100	100
01-402	08/13/2001	2	Additions	265,000			100	100
SP01-17B	03/08/2001	99	n/a				100	100
SP01-17A	03/08/2001	99	n/a				100	100

LAND

CD	T	AC/SF/UN	Nbhd	Infl1	Infl2	ADJ BASE	SAF	Infl3	Lpi	VC	CREDIT AMT	ADJ VALUE
100	S	20,750	SC 1.00	100 1.00	100 1.00	1,759,200	1.72	100 1.00	CF2 4.80			1,442,620

TOTAL	20,750 SF	ZONING	R20	FRNT	0
Nbhd	SOUTH CHATHAM	NOTE	Deeded Rts to Common Area PLN241/22 for Boat Lndg + Rec		
Infl1	100				
Infl2	100				

ASSESSED	CURRENT	PREVIOUS
LAND	1,442,600	1,202,100
BUILDING	775,800	706,100
DETACHED	0	0
OTHER	0	0
TOTAL	**2,218,400**	**1,908,200**

DETACHED

TY	QUAL	COND	DIM/NOTE	YB	UNITS	ADJ PRICE	RCNLD

PHOTO 02/23/2022

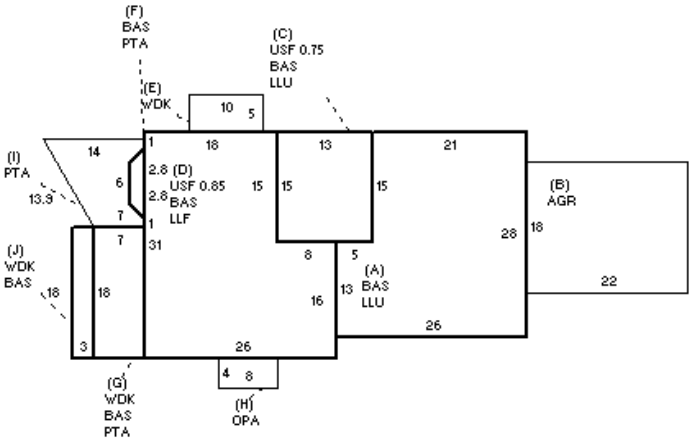

BLDG COMMENTS

BUILDING

BUILDING	CD	ADJ	DESC
MODEL	1		RESIDENTIAL
STYLE	4	1.00	CAPE [100%]
QUALITY	+	1.20	PLUS AVE [100%]
FRAME	1	1.00	WOOD FRAME [100%]

MEASURE	2/23/2022	TCK
LIST	2/23/2022	EST
REVIEW	3/3/2022	EMZ

YEAR BLT	1976	SIZE ADJ	1.000
NET AREA	2,459	DETAIL ADJ	1.030
$NLA(RCN)	$410	OVERALL	1.000

CAPACITY	UNITS	ADJ
STORIES	1.85	1.00
ROOMS	7	1.00
BEDROOMS	3	1.00
FULL BATHS	3	1.00
1/2 BATHS	0	1.00
FIXTURES	11	$10,877
UNITS	1	1.00

ELEMENT	CD	DESCRIPTION	ADJ
FOUNDATION	4	FLR & WALL	1.00
EXT. COVER	1	WOOD SHINGLE	1.00
ROOF SHAPE	1	GABLE	1.00
ROOF COVER	1	ASPH/CMP SHIN	1.00
FLOOR COVER	1	HARDWOOD	1.00
INT. FINISH	2	DRYWALL	1.00
HEATING/COOL	9	WARM/COOL AIR	1.03
FUEL SOURCE	2	GAS	1.00

S	BAT	T	DESCRIPTION	UNITS	YB	ADJ PRICE	RCN
+	LLU	N	LOWER LEVEL UN	848		155.44	131,812
B	AGR	N	ATTACHED GARAGE	396		96.68	38,284
C	USF	L	UP-STRY FIN	146	1976	234.08	34,176
D	LLF	N	LOWER LEVEL FIN	686		203.02	139,272
D	USF	L	UP-STRY FIN	583	2001	234.09	136,472
+	WDK	N	WOOD DECK	230		70.08	16,118
+	PTA	N	PATIO/STOOP	252		21.48	5,413
H	OPA	N	OPEN PORCH	32		91.31	2,922
+	BAS	L	BAS AREA	1,730	1976	275.87	477,258
	F21	O	FPL 2S 1OP	1		12,451.20	12,451
	MST	O	MASONRY STACK	1		2,481.60	2,482

TOTAL RCN	1,007,537

CONDITION ELEM	CD
EXTERIOR	A
INTERIOR	G
KITCHEN	G
BATHS	A
HEAT	A
ELECT	A

EFF.YR/AGE	1994 / 28		
COND	23	23 %	
FUNC	0		
ECON	0		
DEPR	23	% GD	77
RCNLD			$775,800