Key: 5039

Town of CHATHAM - Fiscal Year 2024

9/7/2023 9:38 am SEQ #: 5,481

LEGAL

CURRENT OWNER	PARCEL ID	LOCATION
TAYLORS POND ROAD 113 REALTY TRUST VOGLER MICHAEL A & NANCY TRSTES 197 8TH ST APT 520 CHARLESTOWN, MA 02129	4C-63-T13	113 TAYLORS POND RD

TRANSFER HISTORY	DOS	T	SALE PRICE	BK-PG (Cert)
TAYLORS POND ROAD 113 REA	04/30/2021	A	1	34068-211
VOGLER MICHAEL A & NANCY	03/25/2014	QS	1,625,000	28050-223
PULA DAVID S & LINDA J	10/19/2001	QS	600,000	14343-254

CLASS	CLASS%	DESCRIPTION	BN ID	BN	CARD
1010	100	SINGLE FAMILY		1	1 of 1

PMT NO	PMT DT	TY	DESC	AMOUNT	INSP	BY	1st	%
	04/01/2005	50	Meas & List			RRC	100	100
03-648	12/16/2004	2	Additions	85,000			100	100
000000264	04/15/2004	3	Renovations	8,000			100	100
P2004166	04/07/2004	3	Renovations	10,825			100	100
P2003648	12/12/2003	2	Additions	31,680			100	100

LAND

CD	T	AC/SF/UN	Nbhd	Infl1	Infl2	ADJ BASE	SAF	Infl3	Lpi	VC	CREDIT AMT	ADJ VALUE
100	S	17,330	SC 1.00	100 1.00	100 1.00	1,759,200	2.00	100 1.00	VW6 4.80			1,402,640

TOTAL	17,330 SF	ZONING	R20	FRNT	103
Nbhd	SOUTH CHATHAM	NOTE	Deeded Rts to Common Area PLN291/22 for Boat Lndg + Rec		
Infl1	100				
Infl2	100				

ASSESSED	CURRENT	PREVIOUS
LAND	1,402,600	1,168,800
BUILDING	840,300	764,700
DETACHED	0	0
OTHER	0	0
TOTAL	**2,242,900**	**1,933,500**

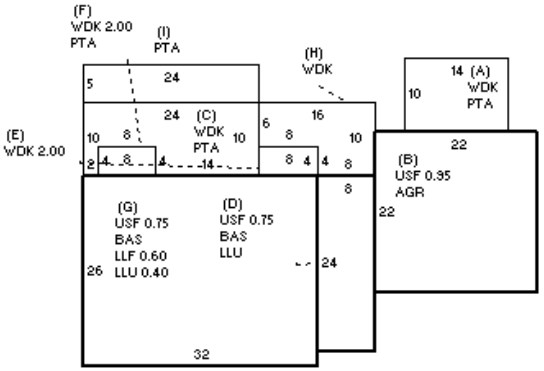

DETACHED

TY	QUAL	COND	DIM/NOTE	YB	UNITS	ADJ PRICE	RCNLD

PHOTO 02/23/2022

BLDG COMMENTS

LLF= FAM RM
INFO @ DOOR 2/23/22

BUILDING

BUILDING	CD	ADJ	DESC
MODEL	1		RESIDENTIAL
STYLE	4	1.00	CAPE [100%]
QUALITY	+	1.20	PLUS AVE [100%]
FRAME	1	1.00	WOOD FRAME [100%]

MEASURE	2/23/2022	TCK
LIST	2/23/2022	EST
REVIEW	3/3/2022	EMZ

YEAR BLT	1978	SIZE ADJ	1.000
NET AREA	2,252	DETAIL ADJ	1.050
$NLA(RCN)	$406	OVERALL	1.000

CAPACITY	UNITS	ADJ
STORIES	1.75	1.00
ROOMS	6	1.00
BEDROOMS	3	1.00
FULL BATHS	3	1.00
1/2 BATHS	0	1.00
FIXTURES	9	$9,072
UNITS	1	1.00

ELEMENT	CD	DESCRIPTION	ADJ
FOUNDATION	4	FLR & WALL	1.00
EXT. COVER	1	WOOD SHINGLE	1.00
ROOF SHAPE	1	GABLE	1.00
ROOF COVER	1	ASPH/CMP SHIN	1.00
FLOOR COVER	3	W/W CARPET	1.00
INT. FINISH	2	DRYWALL	1.00
HEATING/COOL	11	HT-WT/COOL AIR	1.05
FUEL SOURCE	2	GAS	1.00

S	BAT	T	DESCRIPTION	UNITS	YB	ADJ PRICE	RCN
+	PTA	N	PATIO/STOOP	500		21.48	10,740
B	AGR	N	ATTACHED GARAGE	484		94.27	45,629
+	USF	L	UP-STRY FIN	604	2004	243.75	147,228
+	LLU	N	LOWER LEVEL UN	525		161.86	84,976
D	BAS	L	BAS AREA	192	2004	287.27	55,156
+	WDK	N	WOOD DECK	604		70.08	42,329
G	LLF	N	LOWER LEVEL FIN	499		211.41	105,492
G	BAS	L	BAS AREA	832	1978	287.27	239,005
G	USF	L	UP-STRY FIN	624	1978	243.75	152,102
	F21	O	FPL 2S 1OP	1		12,451.20	12,451
	GFP	O	GAS LOG/FP/E FP	1		7,466.40	7,466
	ODS	O	OUT DOOR SHWR-A	1		1,772.40	1,772

TOTAL RCN	913,418

CONDITION ELEM	CD
EXTERIOR	G
INTERIOR	G
KITCHEN	G
BATHS	G
HEAT	U
ELECT	U

EFF.YR/AGE	2014 / 8		
COND	8 8 %		
FUNC	0		
ECON	0		
DEPR	8	% GD	92
RCNLD	$840,300		