Key: 5051

Town of CHATHAM - Fiscal Year 2024

9/7/2023 9:38 am SEQ #: 5,493

LEGAL

CURRENT OWNER	PARCEL ID	LOCATION
MEGAN A CLIFFORD LIVING TRUST 24 HANCOCK ST UNIT 4 BOSTON, MA 02114	4D-13-A9	95 UNCLE DEANES RD

TRANSFER HISTORY	DOS	T	SALE PRICE	BK-PG (Cert)
MEGAN A CLIFFORD LIVING T	10/12/2017	QS	610,000	30824-17
GARY NUDD MASSACHUSETTS Q	12/05/2012	R	1	26917-137
NUDD GARY	12/05/2012	A	1	26917-106

CLASS	CLASS%	DESCRIPTION	BN ID	BN	CARD
1010	100	SINGLE FAMILY		1	1 of 1

PMT NO	PMT DT	TY	DESC	AMOUNT	INSP	BY	1st	%
20-479	08/07/2020	11	Window Rplc	18,360	04/20/2021	NF	100	100
	06/27/2017	3	Renovations		06/27/2017	APK	100	100
	02/13/2004	50	Meas & List			RRC	100	100
04-006	01/06/2004	14	DECK	4,000			100	100
P2004006	12/10/2003	14	DECK	16,000			100	100

LAND

CD	T	AC/SF/UN	Nbhd	Infl1	Infl2	ADJ BASE	SAF	Infl3	Lpi	VC	CREDIT AMT	ADJ VALUE
100	S	16,500	SC 1.00	100 1.00	100 1.00	476,450	2.09	100 1.00	R03 1.30			377,050

TOTAL	16,500 SF	ZONING	R20	FRNT	154
Nbhd	SOUTH CHATHAM	NOTE	Deeded Recreation Rts to Taylors Pond		
Infl1	100				
Infl2	100				

ASSESSED	CURRENT	PREVIOUS
LAND	377,100	314,200
BUILDING	564,300	518,900
DETACHED	0	0
OTHER	0	0
TOTAL	**941,400**	**833,100**

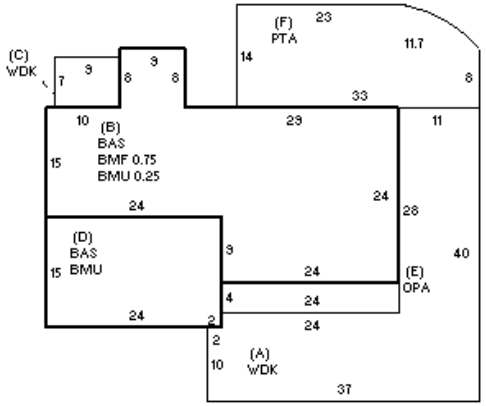

DETACHED

TY	QUAL	COND	DIM/NOTE	YB	UNITS	ADJ PRICE	RCNLD

PHOTO 12/20/2021

BUILDING

BUILDING	CD	ADJ	DESC
MODEL	1		RESIDENTIAL
STYLE	1	0.85	RANCH [100%]
QUALITY	+	1.20	PLUS AVE [100%]
FRAME	1	1.00	WOOD FRAME [100%]

MEASURE	12/20/2021	TCK
LIST	12/20/2021	EST
REVIEW	1/27/2022	EMZ

BLDG COMMENTS

BMF % ESTIMATED

YEAR BLT	1970	SIZE ADJ	1.000
NET AREA	1,368	DETAIL ADJ	0.875
$NLA(RCN)	$469	OVERALL	1.000

CAPACITY	UNITS	ADJ
STORIES	1	1.00
ROOMS	7	1.00
BEDROOMS	3	1.00
FULL BATHS	3	1.00
1/2 BATHS	0	1.00
FIXTURES	11	$9,240
UNITS	1	1.00

ELEMENT	CD	DESCRIPTION	ADJ
FOUNDATION	4	FLR & WALL	1.00
EXT. COVER	1	WOOD SHINGLE	1.00
ROOF SHAPE	1	GABLE	1.00
ROOF COVER	1	ASPH/CMP SHIN	1.00
FLOOR COVER	2	SOFTWOOD	1.00
INT. FINISH	2	DRYWALL	1.00
HEATING/COOL	9	WARM/COOL AIR	1.03
FUEL SOURCE	2	GAS	1.00

S	BAT	T	DESCRIPTION	UNITS	YB	ADJ PRICE	RCN
+	WDK	N	WOOD DECK	811		70.08	56,834
+	BMU	N	BSMT UNFINISHED	612		99.55	60,928
B	BMF	N	BSMT FINISH-SEP	756		130.32	98,522
+	BAS	L	BAS AREA	1,368	1970	277.79	380,011
E	OPA	N	OPEN PORCH	96		91.33	8,767
F	PTA	N	PATIO/STOOP	440		21.48	9,451
	BMG	O	BSMT GARAGE	1		3,324.00	3,324
	F12	O	FPL 1S 2OP	1		12,451.20	12,451
	ODS	O	OUT DOOR SHWR-A	1		1,772.40	1,772

TOTAL RCN	641,302

CONDITION ELEM	CD
EXTERIOR	A
INTERIOR	V
KITCHEN	V
BATHS	V
HEAT	U
ELECT	U

EFF.YR/AGE	2010 / 12	
COND	12	12 %
FUNC	0	
ECON	0	
DEPR	12	% GD 88
RCNLD		$564,300