Key: 5932

Town of CHATHAM - Fiscal Year 2024

9/7/2023 9:38 am SEQ #: 6.396

LEGAL

CURRENT OWNER	PARCEL ID	LOCATION
90 SWEETBRIAR LLC **1 OAKLEIGH LN** **ST LOUIS, MO 63124**	**6D-65-X11**	**90 SWEETBRIAR DR**

TRANSFER HISTORY	DOS	T	SALE PRICE	BK-PG (Cert)
90 SWEETBRIAR LLC	04/11/2022	B	1	(C98-11)
DIXON THOMAS R & DAWN M	11/19/2021	O	808,175	(C98-11)
WARREN ROSEANN L	08/23/2021	A	1	(C98-11)

CLASS	CLASS%	DESCRIPTION	BN ID	BN	CARD
1020	100	CONDOMINIUM		1	1 of 1

PMT NO	PMT DT	TY	DESC	AMOUNT	INSP	BY	1st	%
21-1120	12/08/2021	13	SH.MTL/FHAIR	57,474			100	100
21-1111	12/06/2021	3	Renovations	300,000	04/18/2023	NF	100	100

LAND

CD	T	AC/SF/UN	Nbhd	Infl1	Infl2	ADJ BASE	SAF	Infl3	Lpi	VC	CREDIT AMT	ADJ VALUE

TOTAL	SF	ZONING	R20	FRNT	0
Nbhd		NOTE			
Infl1					
Infl2					

ASSESSED	CURRENT	PREVIOUS
LAND	0	0
BUILDING	1,308,600	1,045,700
DETACHED	200	200
OTHER	0	0
TOTAL	**1,308,800**	**1,045,900**

DETACHED

TY	QUAL	COND	DIM/NOTE	YB	UNITS	ADJ PRICE	RCNLD
SHF	A 1.00	90 0.10		1970	120	13.29	200
PTD	A 1.00	NV 0.00		1956	238	11.30	

PHOTO 04/18/2023

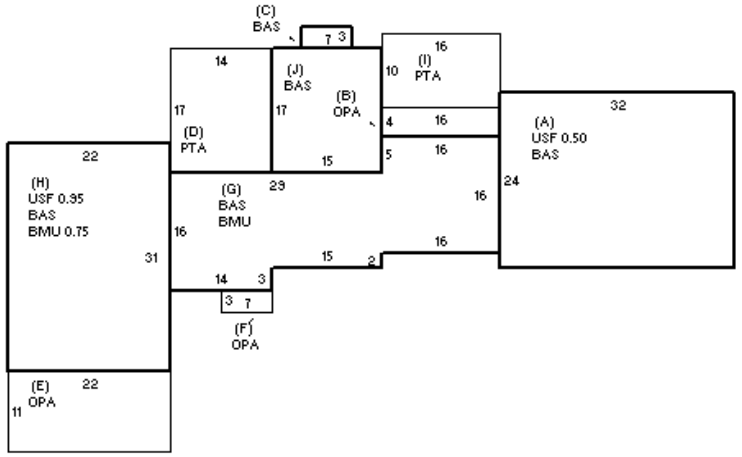

BUILDING

BUILDING	CD	ADJ	DESC
MODEL	10		CONDO
STYLE	2	1.00	FREE STANDING [100%]
QUALITY	A	1.00	AVERAGE [100%]
FRAME	99	1.00	N/A [100%]

MEASURE	6/30/2016	WFF
LIST	6/30/2016	EST
REVIEW	5/8/2023	EMZ

BLDG COMMENTS

' The Anchorage '-Extra KITCHEN

YEAR BLT	1739	SIZE ADJ	1.000
NET AREA	3,433	DETAIL ADJ	1.890
$NLA(RCN)	$406	OVERALL	1.000

CAPACITY	UNITS	ADJ
ROOMS	15	1.00
BEDROOMS	8	1.00
FULL BATHS	4	1.00
1/2 BATHS	0	1.00
FIXTURES	13	$19,656

ELEMENT	CD	DESCRIPTION	ADJ
COMPLEX	59	CHATHAM CREST	1.80
UNIT MODEL	99	N/A	1.00
VIEW/LOC	1	NONE	1.00
HVAC	11	HT-WT/COOL AIR	1.05
FUEL SOURCE	2	GAS	1.00
FLOOR LEVEL	99	N/A	1.00
NEIGHBORHOOD	4	SOUTH	1.00

S	BAT	T	DESCRIPTION	UNITS	YB	ADJ PRICE	RCN
+	BAS	L	BAS AREA	2,401	1739	391.45	939,870
+	USF	L	UP-STRY FIN	1,032	1739	371.91	383,812
+	OPA	N	OPEN PORCH	327		24.90	8,142
+	PTA	N	PATIO	398		5.70	2,269
+	BMU	N	BSMT UNFINISHED	1,187		23.00	27,301
	F11	O	FPL 1S 1OP	1		3,414.00	3,414
	F22	O	FPL 2S 2OP	1		6,639.00	6,639
	ODS	O	OUT DOOR SHWR-A	1		1,022.00	1,022

TOTAL RCN	1,392,125

CONDITION ELEM	CD
INTERIOR	V
KITCHEN	V
BATHS	V
EXTERIOR	A

EFF.YR/AGE	2002 / 20	
COND	6	6 %
FUNC	0	
ECON	0	
DEPR	6	% GD 94
RCNLD		$1,308,600