**Key: 7262**

# Town of CHATHAM - Fiscal Year 2024

9/7/2023 9:38 am SEQ #: 7,748

## LEGAL

| CURRENT OWNER | PARCEL ID | LOCATION |
|---|---|---|
| DUFFY JOSEPH & LOIS<br>611 CASCADES CT<br>BERWYN, PA 19312 | 9B-18-7 | 350 BARN HILL RD |

| TRANSFER HISTORY | DOS | T | SALE PRICE | BK-PG (Cert) |
|---|---|---|---|---|
| DUFFY JOSEPH & LOIS | 12/03/2021 | QS | 1,100,000 | 34718-133 |
| OYSTER POND RIVERVIEW LLC | 05/17/2013 | A | 1 | 27385-125 |
| STANNE CAROLYN B & SHERYL | 03/13/2012 | B | 1 | 26152-209 |

| CLASS | CLASS% | DESCRIPTION | BN ID | BN | CARD |
|---|---|---|---|---|---|
| 1010 | 100 | SINGLE FAMILY | | 1 | 1 of 1 |

| PMT NO | PMT DT | TY | DESC | AMOUNT | INSP | BY | 1st | % |
|---|---|---|---|---|---|---|---|---|
| | 10/10/2018 | 3 | Renovations | | 10/10/2018 | APK | 100 | 100 |
| | 03/03/2017 | 8 | Cyc. Reinsp. | | 03/03/2017 | APK | 100 | 100 |
| | 02/09/2010 | 50 | Meas & List | | | RRC | 100 | 100 |
| 1985101 | 06/25/1986 | 99 | n/a | | | | 100 | 100 |

## LAND

| CD | T | AC/SF/UN | Nbhd | Infl1 | Infl2 | ADJ BASE | SAF | Infl3 | Lpi | VC | CREDIT AMT | ADJ VALUE |
|---|---|---|---|---|---|---|---|---|---|---|---|---|
| 100 | S | 10,435 | WC 1.00 | 100 1.00 | 100 1.00 | 842,950 | 3.09 | 100 1.00 | VW3 2.30 | | | 623,650 |

| TOTAL | 10,435 SF | ZONING | R20 | FRNT | 60 |
|---|---|---|---|---|---|
| Nbhd | WEST CHATHAM | NOTE | | | |
| Infl1 | 100 | | | | |
| Infl2 | 100 | | | | |

| ASSESSED | CURRENT | PREVIOUS |
|---|---|---|
| LAND | 623,700 | 519,700 |
| BUILDING | 489,300 | 445,300 |
| DETACHED | 0 | 0 |
| OTHER | 0 | 0 |
| TOTAL | **1,113,000** | **965,000** |

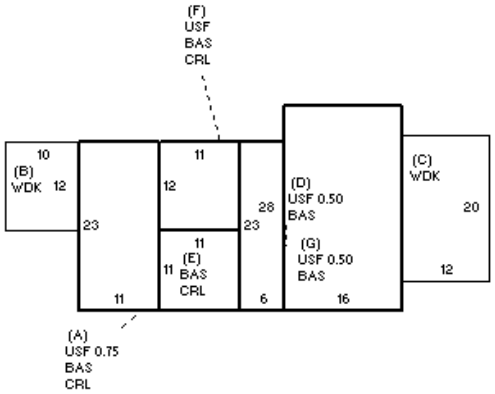


## DETACHED

| TY | QUAL | COND | DIM/NOTE | YB | UNITS | ADJ PRICE | RCNLD |
|---|---|---|---|---|---|---|---|

PHOTO 01/15/2013

BLDG COMMENTS

## BUILDING

| BUILDING | CD | ADJ | DESC |
|---|---|---|---|
| MODEL | 1 | | RESIDENTIAL |
| STYLE | 4 | 1.00 | CAPE [100%] |
| QUALITY | + | 1.20 | PLUS AVE [100%] |
| FRAME | 1 | 1.00 | WOOD FRAME [100%] |

| MEASURE | | |
|---|---|---|
| LIST | | |
| REVIEW | 11/3/2021 | APK |

| YEAR BLT | 1953 | SIZE ADJ | 1.000 |
|---|---|---|---|
| NET AREA | 1,707 | DETAIL ADJ | 1.030 |
| $NLA(RCN) | $333 | OVERALL | 1.000 |

| CAPACITY | UNITS | ADJ |
|---|---|---|
| STORIES | 1.75 | 1.00 |
| ROOMS | 8 | 1.00 |
| BEDROOMS | 4 | 1.00 |
| FULL BATHS | 2 | 1.00 |
| 1/2 BATHS | 0 | 1.00 |
| FIXTURES | 7 | $6,922 |
| UNITS | 1 | 1.00 |

| ELEMENT | CD | DESCRIPTION | ADJ |
|---|---|---|---|
| FOUNDATION | 6 | CRAWL | 1.00 |
| EXT. COVER | 1 | WOOD SHINGLE | 1.00 |
| ROOF SHAPE | 1 | GABLE | 1.00 |
| ROOF COVER | 1 | ASPH/CMP SHIN | 1.00 |
| FLOOR COVER | 2 | SOFTWOOD | 1.00 |
| INT. FINISH | 2 | DRYWALL | 1.00 |
| HEATING/COOL | 9 | WARM/COOL AIR | 1.03 |
| FUEL SOURCE | 2 | GAS | 1.00 |

| S | BAT | T | DESCRIPTION | UNITS | YB | ADJ PRICE | RCN |
|---|---|---|---|---|---|---|---|
| + | CRL | N | CRAWL SPACE | 506 | | 31.65 | 16,013 |
| + | USF | L | UP-STRY FIN | 391 | 1988 | 264.24 | 103,318 |
| + | WDK | N | WOOD DECK | 360 | | 70.08 | 25,229 |
| + | BAS | L | BAS AREA | 523 | 1988 | 311.41 | 162,866 |
| + | BAS | L | BAS AREA | 569 | 1953 | 311.41 | 177,191 |
| G | USF | L | UP-STRY FIN | 224 | 1953 | 264.24 | 59,190 |
| | F11 | O | FPL 1S 1OP | 1 | | 8,972.40 | 8,972 |
| | GFP | O | GAS LOG/FP/E FP | 1 | | 7,466.40 | 7,466 |
| | ODS | O | OUT DOOR SHWR-A | 1 | | 1,772.40 | 1,772 |

| TOTAL RCN | 568,939 |
|---|---|

| CONDITION ELEM | CD |
|---|---|
| EXTERIOR | G |
| INTERIOR | G |
| KITCHEN | G |
| BATHS | G |
| HEAT | U |
| ELECT | U |

| EFF.YR/AGE | 2008 / 14 | |
|---|---|---|
| COND | 14 | 14 % |
| FUNC | 0 | |
| ECON | 0 | |
| DEPR | 14 | % GD 86 |
| RCNLD | | $489,300 |