Key: 857

Town of CHATHAM - Fiscal Year 2024

9/7/2023 9:38 am SEQ #: 943

LEGAL

CURRENT OWNER	PARCEL ID	LOCATION
NARBESHUBER HERBERT P & CAROL H **202 HORIZON DR** **CHATHAM, MA 02633**	**11H-32-C17**	**202 HORIZON DR**

TRANSFER HISTORY	DOS	T	SALE PRICE	BK-PG (Cert)
NARBESHUBER HERBERT P & C	07/08/1998	99	275,000	11558-104
WEINSTEIN	07/22/1997	A	1	10861-195

CLASS	CLASS%	DESCRIPTION	BN ID	BN	CARD
1010	**100**	**SINGLE FAMILY**		**1**	**1 of 1**

PMT NO	PMT DT	TY	DESC	AMOUNT	INSP	BY	1st	%
	04/02/2007	50	Meas & List			RRC	100	100

LAND

CD	T	AC/SF/UN	Nbhd	Infl1	Infl2	ADJ BASE	SAF	Infl3	Lpi	VC	CREDIT AMT	ADJ VALUE
100	S	23,280	MC 1.00	100 1.00	100 1.00	366,500	1.56	100 1.00	R02 1.00			306,170

TOTAL	23,280 SF	ZONING	R60	FRNT	0
Nbhd	MID CHATHAM	NOTE	PTL VIEW OBSTR DISTANT BAY SEASONAL		
Infl1	100				
Infl2	100				

ASSESSED	CURRENT	PREVIOUS
LAND	306,200	255,100
BUILDING	553,300	503,400
DETACHED	0	0
OTHER	0	0
TOTAL	**859,500**	**758,500**

DETACHED

TY	QUAL	COND	DIM/NOTE	YB	UNITS	ADJ PRICE	RCNLD

PHOTO 11/10/2021

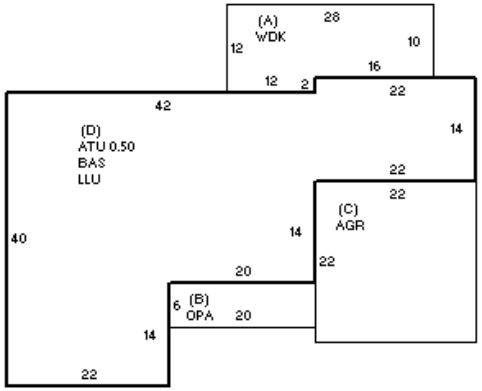

BLDG COMMENTS

BUILDING

BUILDING	CD	ADJ	DESC
MODEL	1		RESIDENTIAL
STYLE	1	0.85	RANCH [100%]
QUALITY	+	1.20	PLUS AVE [100%]
FRAME	1	1.00	WOOD FRAME [100%]

MEASURE	11/10/2021	NF
LIST	11/10/2021	EST
REVIEW	12/13/2021	MR

YEAR BLT	1973	SIZE ADJ	1.000
NET AREA	1,708	DETAIL ADJ	0.850
$NLA(RCN)	$463	OVERALL	1.000

CAPACITY	UNITS	ADJ
STORIES	1	1.00
ROOMS	6	1.00
BEDROOMS	3	1.00
FULL BATHS	2	1.00
1/2 BATHS	0	1.00
FIXTURES	6	$4,896
UNITS	1	1.00

ELEMENT	CD	DESCRIPTION	ADJ
FOUNDATION	4	FLR & WALL	1.00
EXT. COVER	1	WOOD SHINGLE	1.00
ROOF SHAPE	1	GABLE	1.00
ROOF COVER	1	ASPH/CMP SHIN	1.00
FLOOR COVER	16	HARDWD/OTHER	1.00
INT. FINISH	2	DRYWALL	1.00
HEATING/COOL	2	HOT WATER	1.00
FUEL SOURCE	2	GAS	1.00

S	BAT	T	DESCRIPTION	UNITS	YB	ADJ PRICE	RCN
A	WDK	N	WOOD DECK	304		70.08	21,305
B	OPA	N	OPEN PORCH	120		91.32	10,958
C	AGR	N	ATTACHED GARAGE	484		94.27	45,629
D	LLU	N	LOWER LEVEL UN	1,708		130.45	222,805
D	BAS	L	BAS AREA	1,708	1973	231.52	395,436
D	ATU	N	UNFIN ATTIC	854		94.20	80,447
	F11	O	FPL 1S 1OP	1		8,972.40	8,972

TOTAL RCN	790,448

CONDITION ELEM	CD
EXTERIOR	A
INTERIOR	A
KITCHEN	A
BATHS	A
HEAT	A
ELECT	A

EFF.YR/AGE	1973 / 49	
COND	30	30 %
FUNC	0	
ECON	0	
DEPR	30	% GD 70
RCNLD		$553,300