Key: 905

Town of CHATHAM - Fiscal Year 2024

9/7/2023 9:38 am SEQ #: 992

LEGAL

CURRENT OWNER	PARCEL ID	LOCATION
MARANHAS RICHARD A & CECILE A PO BOX 371 N CHATHAM, MA 02650-0371	11I-17-G5	21 UP-HILL CIR

TRANSFER HISTORY	DOS	T	SALE PRICE	BK-PG (Cert)
MARANHAS RICHARD A & CECI	01/05/2016	A	1	29375-200
MARANHAS RICHARD A & CECI	01/05/2016	A	1	29375-191
CECILE A. MARANHAS	01/05/2016	A	1	29375-188

CLASS	CLASS%	DESCRIPTION	BN ID	BN	CARD
1010	100	SINGLE FAMILY		1	1 of 1

PMT NO	PMT DT	TY	DESC	AMOUNT	INSP	BY	1st	%
		8	Cyc. Reinsp.		11/04/2021	NF	100	100
21-345	06/04/2020	10	Reroof	8,000	04/26/2021	TCK	100	100
	04/02/2007	50	Meas & List			RRC	100	100
1989190	10/23/1989	99	n/a				100	100
1983033	03/11/1983	99	n/a				100	100

LAND

CD	T	AC/SF/UN	Nbhd	Infl1	Infl2	ADJ BASE	SAF	Infl3	Lpi	VC	CREDIT AMT	ADJ VALUE
100	S	28,090	MC 1.00	100 1.00	100 1.00	366,500	1.34	100 1.00	R03 1.00			315,870

TOTAL	28,090 SF	ZONING	R60	FRNT	0

Nbhd	MID CHATHAM
Infl1	100
Infl2	100

NOTE

ASSESSED	CURRENT	PREVIOUS
LAND	315,900	263,200
BUILDING	641,600	591,900
DETACHED	3,000	2,800
OTHER	0	0
TOTAL	**960,500**	**857,900**

DETACHED

TY	QUAL	COND	DIM/NOTE	YB	UNITS	ADJ PRICE	RCNLD
SHF	A 1.00	10 0.90	8X14		112	13.56	1,400
PTD	A 1.00	10 0.90	11X14		154	11.30	1,600

PHOTO 11/04/2021

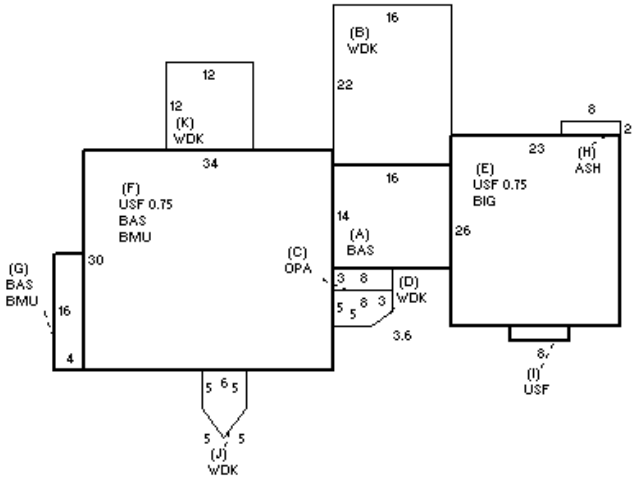

BUILDING

BUILDING	CD	ADJ	DESC
MODEL	1		RESIDENTIAL
STYLE	4	1.00	CAPE [100%]
QUALITY	+	1.20	PLUS AVE [100%]
FRAME	1	1.00	WOOD FRAME [100%]

MEASURE	11/4/2021	NF
LIST	11/4/2021	EST
REVIEW	12/6/2021	EMZ

BLDG COMMENTS

YEAR BLT	1983	SIZE ADJ	1.000
NET AREA	2,538	DETAIL ADJ	1.000
$NLA(RCN)	$346	OVERALL	1.000

CAPACITY	UNITS	ADJ
STORIES	1.75	1.00
ROOMS	7	1.00
BEDROOMS	4	1.00
FULL BATHS	3	1.00
1/2 BATHS	0	1.00
FIXTURES	9	$8,640
UNITS	1	1.00

ELEMENT	CD	DESCRIPTION	ADJ
FOUNDATION	4	FLR & WALL	1.00
EXT. COVER	1	WOOD SHINGLE	1.00
ROOF SHAPE	1	GABLE	1.00
ROOF COVER	1	ASPH/CMP SHIN	1.00
FLOOR COVER	14	HARDWD/ASPH TL	1.00
INT. FINISH	2	DRYWALL	1.00
HEATING/COOL	1	FORCED AIR	1.00
FUEL SOURCE	2	GAS	1.00

S	BAT	T	DESCRIPTION	UNITS	YB	ADJ PRICE	RCN
+	BAS	L	BAS AREA	1,308	1983	282.67	369,727
+	WDK	N	WOOD DECK	575		70.08	40,296
C	OPA	N	OPEN PORCH	24		91.30	2,191
E	BIG	N	BUILT-IN GARAGE	598		92.29	55,189
+	BMU	N	BSMT UNFINISHED	1,084		85.27	92,437
H	ASH	N	ATT SHED	16		72.75	1,164
+	USF	L	UP-STRY FIN	1,230	1983	239.85	295,016
	F21	O	FPL 2S 1OP	1		12,451.20	12,451
	ODS	O	OUT DOOR SHWR-A	1		1,772.40	1,772

TOTAL RCN	878,885

CONDITION ELEM	CD
EXTERIOR	A
INTERIOR	A
KITCHEN	A
BATHS	A
HEAT	A
ELECT	A

EFF.YR/AGE	1983 / 39	
COND	27	27 %
FUNC	0	
ECON	0	
DEPR	27	% GD 73
RCNLD		$641,600